GR-DL-30WE SMD Downlights

EuroLight™ GRNLED

IP22

Dimension

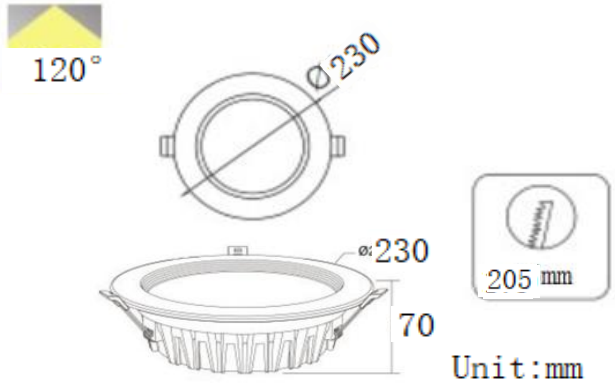

Description&Feature

LED Downlight delivers a superior LED alternative that'sup to 60% more energy efficient than the conventional downlight retrofits.
It is also ideal for all commercial lighting applications as well as public indoor space where there is limited space in the ceiling.

Its lifetime can be up to 10years.
It is the perfect solution for commercial lighting.
The other extra function such as dimming/ emergency backup also can be available.

Light Distribution Curve

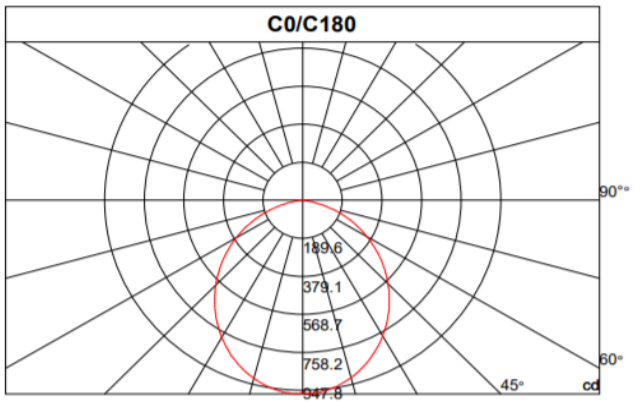

Specification

Order Model	GR-DL-30WE
Dimension(mm)	Φ230*H70mm
Outcut	Φ200-205mm
Power	30W±5%
LED Chips brand	Epistar/Samsung SMD Led chips
Lumens	2700-3000lm
Color temperature	3000K/4000K-4500K/6000K-6500K
Driver	Included Top quality driver.free flicker
Input voltage	100-240VAC / 220-240VAC 50/60Hz
Power factor	>0.6 or >0.9 if needed
CRI	>80 (Osram>90)
SDCM	<5
Working life	>50000Hrs
Efficiency	>87%
Materials	Die-cast aluminum+PC,White finished
Beam angle	110-120°
IP Grade	IP22 indoor use only
Emergency kits	No. but it is ok to do emergency backup for 30% power with 1hrs 2hrs 3hrs duration
Dimmable	No. but it is ok to do Triac/0-10V/DALI Dimming if needed
Working temperature	-25°C～+50°C
Storage temperature	-30°C～+55°C
Standard	CE LVD EMC RoHs
Warranty	2/3/5Years