GR-DL-25WL Wall Washer downlight

EuroLight™ GRNLED

IP22

Dimension

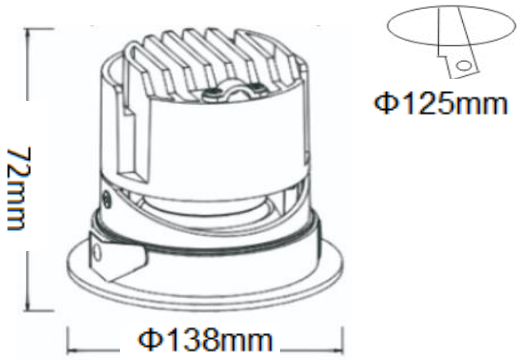

Description&Feature

LED Downlight adopt deep anti-glare design,it is ok to be rotation 30°,different reflector colors option(white/black/silver/gun black/gold) and consists of CREE/CITIZEN/Bridgelux chips,delivers a superior LED alternative that's up to 60% more energy efficient than the conventional downlight retrofits.

The other extra function such as dimming/ emergency backup/Zigebee smart control also can be available.

Light Distribution Curve

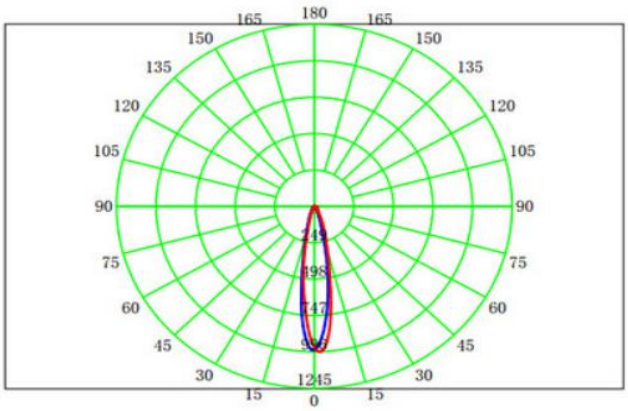

Specification

Order Model	GR-DL-25WL
Dimension(mm)	ø138*72mm
Outcut	Φ125mm
Power	25W±5%
LED Chips brand	CREE/CITIZEN/Bridgelux COB chips
Lumens	2200-2500lm
Color temperature	3000K/4000K-4500K/6000K-6500K
Driver	Philips/Osram/DONE/Eagerise/Boke/LiFud etc Top brand
Input voltage	100-240VAC / 220-240VAC 50/60Hz
Power factor	>0.6 or >0.9 if needed
CRI	>90
SDCM	<5 (<3 available)
Working life	>50000Hrs
Efficiency	>88%
Materials	Die-cast aluminum,White finished (silver/black/white/gold reflectors option)
Beam angle	24°as standard (15°/38°available if needed)
IP Grade	IP22 indoor use only
Emergency kits	No. but it is ok to do emergency backup for 30% power with 1hrs 2hrs 3hrs duration
Dimmable	No. but it is ok to do Triac/0-10V/DALI/Zigbee smart control if needed
Working temperature	-25°C～+55°C
Storage temperature	-30°C～+60°C
Standard	CE LVD EMC RoHs
Warranty	2/3/5Years