GR-DL-20WN 5inch COB Downlight

EuroLight™ GRNLED

IP22

Dimension

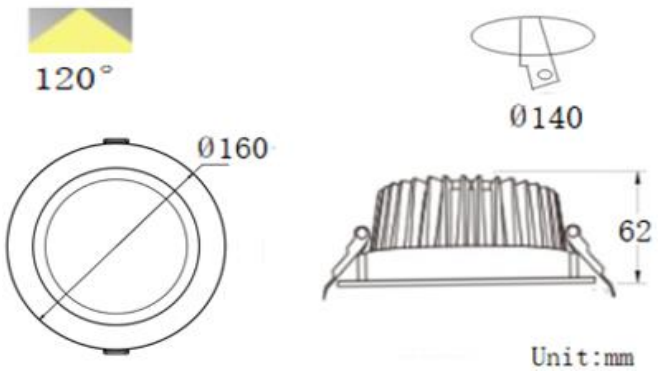

Description&Feature

LED Downlight adopt top quality aluminum as housing and Osram/CREE chips,delivers a superior LED alternative that'sup to 60% more energy efficient than the conventional downlight retrofits. It is also ideal for all commercial lighting applications as well as public indoor space where there is limited space in the ceiling.

Its lifetime can be up to 10years.

It is the perfect solution for commercial lighting.

The other extra function such as dimming/ emergency backup also can be available.

Light Distribution Curve

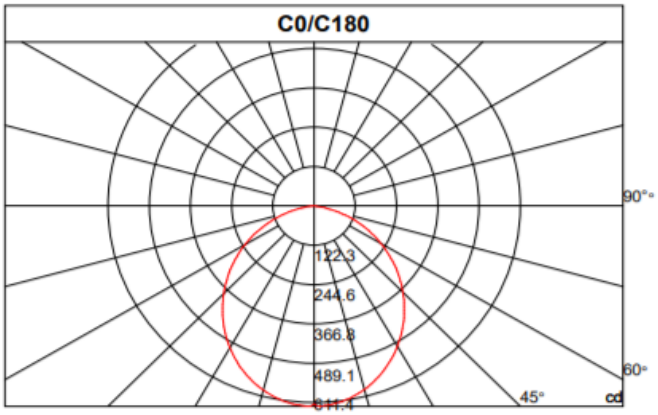

Specification

Order Model	GR-DL-20WN
Dimension(mm)	Ø160*H62mm
Outcut	Φ140-145mm
Power	20W±5%
LED Chips brand	CREE/Osram/Bridgelux COB Led chips
Lumens	1700-2000lm
Color temperature	3000K/4000K-4500K/6000K-6500K
Driver	Philips/Osram/DONE/Eagerise/Boke/LiFud etc Top brand
Input voltage	100-240VAC / 220-240VAC 50/60Hz
Power factor	>0.6 or >0.9 if needed
CRI	>92
SDCM	<5 (<3 available)
Working life	>50000Hrs
Efficiency	>89%
Materials	Die-cast aluminum+Glass cover,White finished
Beam angle	110-120°
IP Grade	IP22 indoor use only
Emergency kits	No. but it is ok to do emergency backup for 30% power with 1hrs 2hrs 3hrs duration
Dimmable	No. but it is ok to do Triac/0-10V/DALI Dimming if needed
Working temperature	-30°C～+55°C
Storage temperature	-35°C～+60°C
Standard	CE LVD EMC RoHs
Warranty	3/5/7Years